MINI-BEAM® SM2A312D

Self-contained AC-operated Diffuse Mode Sensors

- Compact, modulated, self-contained diffuse proximity mode sensors for 24-240V ac operation
- 2-wire hookup for convenient installation
- Range to 380 mm (15 in) (referenced to 90% reflectance white test card)
- Switch-selectable for light operate or dark operate
- SPST SCR solid-state output switches up to 300mA; low leakage current and saturation voltage
- Rugged, epoxy-encapsulated construction: meets NEMA standards 1, 2, 3, 3S, 4, 4X, 12 and 13; IEC IP67
- Physically and electrically interchangeable with 18 mm barrel-type photoelectrics

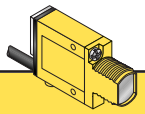

Infrared, 880 nm

MINI-BEAM Diffuse Mode

Models	Range	Cable	Supply Voltage	Output Type	Excess Gain	Beam Pattern
					Performance based on 90% reflectance white test card	
SM2A312D **SM2A312DQD**	380 mm (15 in)	2 m (6.5 ft) 3-Pin Micro QD	24-240V ac	SPST Solid-state 2-Wire	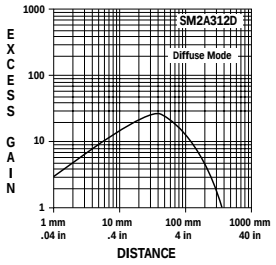	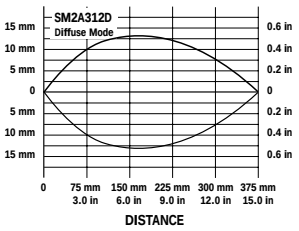

For Standard MINI-BEAMs:

i) 9 m (30 ft) cables are available by adding suffix **"W/30"** to the model number of any cabled sensor (e.g. - **SM2A312D W/30**).

ii) A 150 mm (6 in.) long pigtail cable with attached QD connector is available by adding suffix **"QDP"** to the model number of any MINI-BEAM sensor (e.g. - **SM2A312DQDP**). See page 5 for more information.

iii) A model with a QD connector requires an accessory mating cable. See page 8 for more information.

MINI-BEAM Installation and Alignment

Proper operation of the SM2A312D sensor requires that it be mounted securely and aligned properly. Excessive movement or vibration can result in intermittent or false operation caused by loss of alignment. For best results, final-mount the SM2A312D in an 18mm-hole by its threaded barrel or use a mounting bracket (see page 6).

1) Begin with the sensor at the desired distance from the object to be sensed, and at the approximate position where it will be mounted. The background should be as far behind the object as possible (at least three times the distance of the sensor from the object), and as dark a color as possible compared to the object. Ideally, the object should present its largest reflective surface to the sensor.

2) Switch the sensor to light-operate mode. With the object in the sensing position, apply power to the sensor, and advance the 15-turn GAIN control to maximum (clockwise end of rotation). The GAIN control is clutched at both ends to avoid damage, and will "free-wheel" when either endpoint is reached.

   If the sensor is "seeing" its reflected light, the alignment LED should be "on". Move the sensor up-down-right-left (include angular rotation) to find the center of movement zone within which the LED remains lit. Reducing the GAIN setting (if necessary) will reduce the size of the movement zone and make more precise alignment possible.

3) Repeat the alignment motions after each GAIN reduction. When you are satisfied that you have obtained optimum alignment, mount the sensor solidly in that position. Increase the GAIN to maximum. Test the system by removing the object from the sensing position. The receiver LED indicator should go "off". If the LED indicator does not go "off", the sensor is reacting to light reflected from a background surface. Reduce the GAIN setting until the alignment indicator goes "off", plus two additional full turns. Again place the object in the sensing position. If the alignment indicator does not come "on", the sensor is receiving as much or more light energy from the background as from the object. Consider the following alternatives:

   a) move the sensor closer to the object and reduce the sensitivity (GAIN);

   b) reduce background reflectivity by painting the background with flat-black paint, or by scuffing the background or cutting a hole through it;

   c) tilt the sensor or the background so that the sensing beam is not perpendicular to the background.

Diffuse Mode Alignment

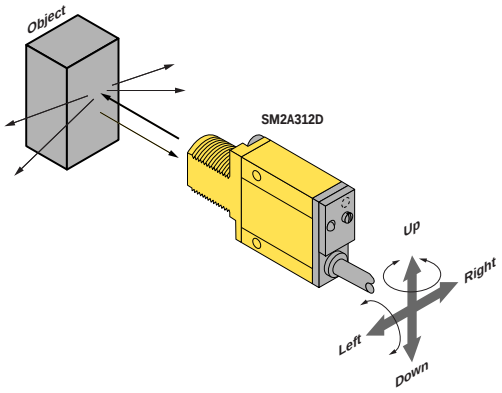

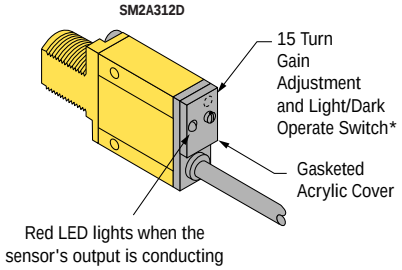

*** Note regarding Light/Dark operate switch:**
- Turn switch *fully* clockwise for light operate (sensor outputs conduct when object is present)
- Turn switch *fully* counterclockwise for dark operate (sensor outputs conduct when object is absent)

MINI-BEAM AC Product Specifications	
Supply Voltage and Current	24 to 240V ac (50/60 Hz), 250V ac max
Supply Protection Circuitry	Protected against transient voltages
Output Configuration	SPST SCR solid-state relay with either normally closed or normally open contact (light/dark operate selectable); 2-wire hookup
Output Rating	Minimum load current 5 mA; maximum steady-state load capability 300 mA to 50°C ambient (122°F) 100 mA to 70°C ambient (158°F) **Inrush capability** 3 amps for 1 second (non-repetitive); 10 amps for 1 cycle (non-repetitive) **Off-state leakage current** less than 1.7 mA rms **On-state voltage** drop ≤5 volts at 300 mA load, ≤10 volts at 15 mA load
Output Protection Circuitry	Protected against false pulse on power-up
Output Response Time	8 milliseconds on and off "OFF" response time specification does not include load response of up to ½ ac cycle (8.3 milliseconds). Response time specification of load should be considered when important. (NOTE: 300 millisecond delay on power-up.)
Repeatability	2.6 milliseconds; Response time and repeatability specifications are independent of signal strength.
Adjustments	LIGHT/DARK OPERATE select switch, and 15-turn slotted brass screw GAIN (sensitivity) adjustment potentiometer (clutched at both ends of travel). Both controls are located on rear panel of sensor and protected by a gasketed, clear acrylic cover.
Indicators	Red indicator LED on rear of sensor is "ON" when the load is energized
Construction	Reinforced VALOX® housing, totally encapsulated, o-ring sealing, acrylic lenses, and stainless steel screws
Environmental Rating	Meets NEMA standards 1, 2, 3, 3S, 4, 4X, 12, and 13; IEC IP67
Connections	PVC-jacketed 2-conductor 2 m (6.5ft) or 9 m (30ft) cables, or 3-pin micro-style quick disconnect (QD) fitting are available. QD cables are ordered separately. See page 8.
Operating Temperature	**Temperature:** -20° to +70°C (-4° to +158°F) **Maximum Relative Humidity:** 90% at 50°C (non-condensing)
Application Notes	i) ac MINI-BEAMs may be destroyed from overload conditions ii) Use on low voltage requires careful analysis of the load to determine if the leakage current or on-state voltage of the sensor will interfere with proper operation of the load iii) The false-pulse protection feature may cause momentary drop-out of the load when the sensor is wired in series or parallel with mechanical switch contacts
Certifications	CE CSA® UL®

VALOX® is a registered trademark of General Electric Company

MINI-BEAM AC Hookup Diagrams

AC Sensors with Attached Cable

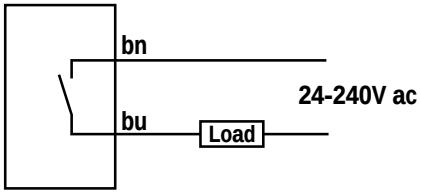

AC Sensors with Quick Disconnect (3-Pin Micro-Style)

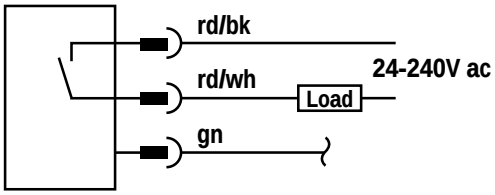

3-Pin Micro-Style Pin-out
(Cable Connector Shown)

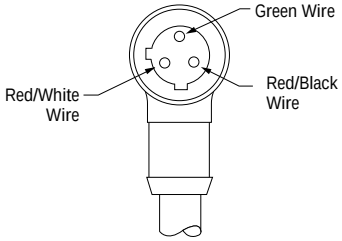

Quick Disconnect (QD) Option

AC MINI-BEAM sensors are sold with either a 2 m (6.5 ft) or a 9 m (30 ft) attached PVC-covered cable, or with a 3-pin micro-style QD cable fitting.

AC QD sensors are identified by the letters “QD” in their model number suffix. For more information on mating QD cables, see page 8.

MINI-BEAM Dimension Information

MINI-BEAM AC Sensor with Integral Cable

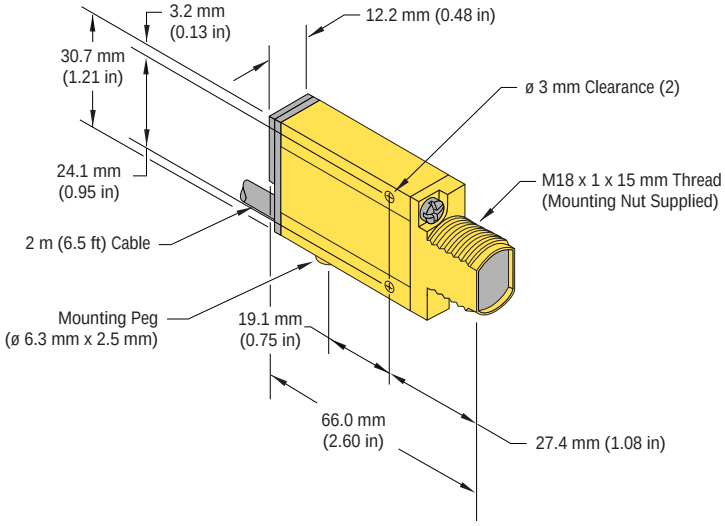

MINI-BEAM AC Sensor with Quick-Disconnect

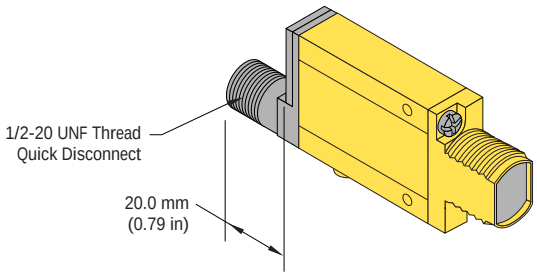

MINI-BEAM MODIFICATIONS

Model Suffix	Modification	Description		Example of Model Number
W/30	9 meter (30 ft) cable	All MINI-BEAM sensors may be ordered with an integral 9 m (30 ft) cable in place of the standard 2 m (6.5 ft) cable		SM2A312D W/30
QDP	Pigtail Quick Disconnect	All MINI-BEAMs may be built with a 150 mm (6 in) long integral cable which is terminated with the appropriate QD connector.		SM2A312DQDP

Replacement Lens Assemblies

MINI-BEAM lens assemblies are field-replaceable.

Model	Description	
UC-300L	Replacement lens for SM2A312D	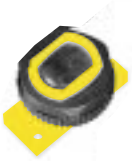

Right-Angle Reflectors

MINI-BEAM right-angle reflectors are useful for tight sensing locations. NOTE: These reflectors significantly decrease excess gain.

Model	Description	
RAR-300SM	• Side mount reflector • Profile dimension of 14 mm (0.56 in) in the direction of the scan	
RAR-300FM	• Front mount reflector that attaches directly to the threaded barrel of most MINI-BEAMs • Profile dimension of 34 mm (1.35 in) in the direction of the scan	

Mounting Brackets

Model	Description		
SMB312S	Stainless steel 2-axis, side mounting bracket	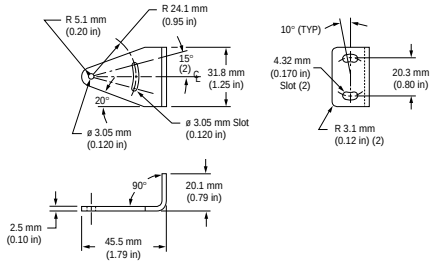	
SMB312PD	Stainless steel 18 mm barrel-mounting bracket	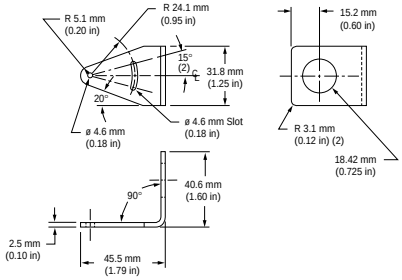	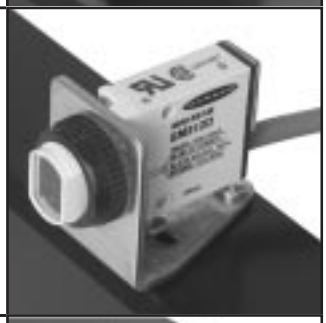
SMB312B	Stainless steel 2-axis, bottom mounting bracket	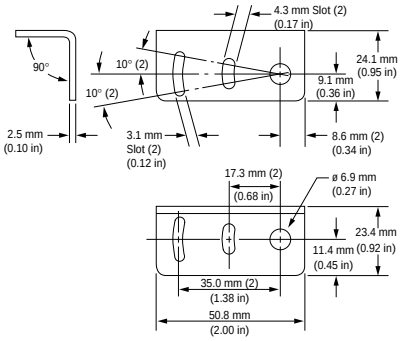	
SMB46L	• “L” bracket • 14 ga 316 stainless steel	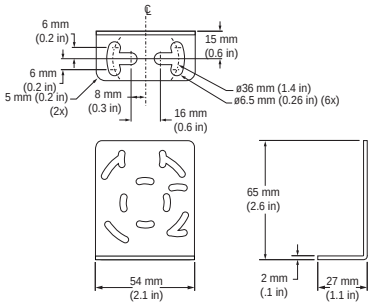	

Mounting Brackets

Model	Description	Dimensions	
SMB46S	• "S" bracket • 14 ga 316 stainless steel	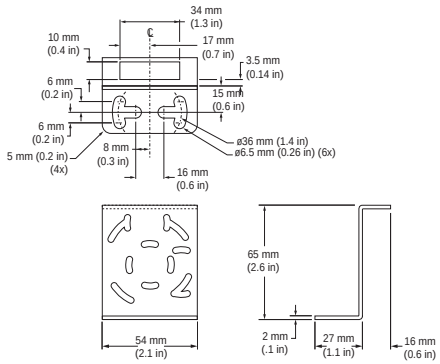	
SMB46U	• "U" bracket • 14 ga 316 stainless steel	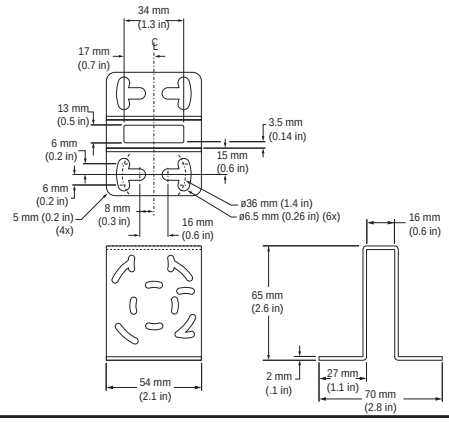	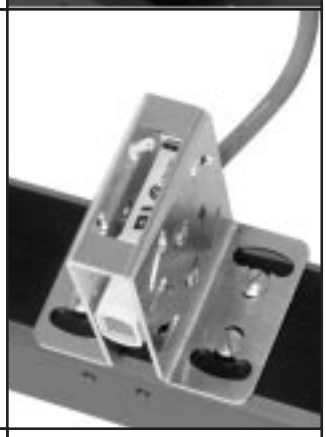
SMB18C	• 18 mm split clamp black VALOX® bracket • Stainless steel mounting hardware included	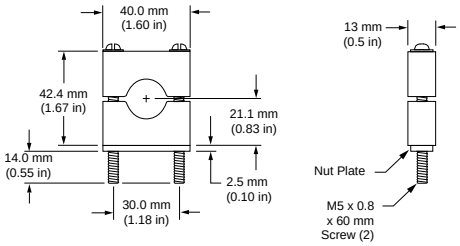	
SMB18S	• 18 mm swivel, black VALOX® bracket • Stainless steel mounting hardware included	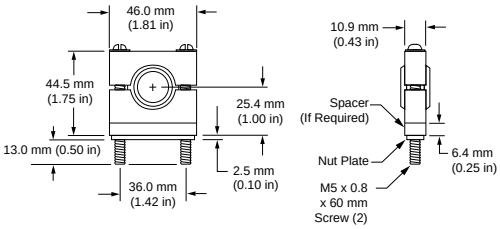	

Extension Cables (without connectors)

The following cables are available for extending the length of existing sensor cable. These are 30 m (100 ft) lengths of MINI-BEAM cable. This cable may be spliced to existing cable. Connectors, if used, must be customer-supplied.

Model	Type	Used with:
EC312A-100	2-conductor	All MINI-BEAM SM2A312 ac models

Micro-Style Quick Disconnect Cables

Cable: PVC jacket, polyurethane connector body, nickel-plated brass coupling nut
Conductors: 22 or 20 AWG high-flex stranded, PVC insulation, gold-plated contacts
Temperature: -40 to +80°C (-40 to +176°F)
Voltage Rating: 250V ac/300V dc (3-pin), 125V ac/150V dc (4-pin)

Style	Model	Length	Dimensions	Pin-out
3-Pin Straight	**MQDC-306** **MQDC-315** **MQDC-330**	2 m (6.5 ft) 5 m (15 ft) 9 m (30 ft)	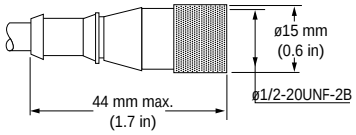	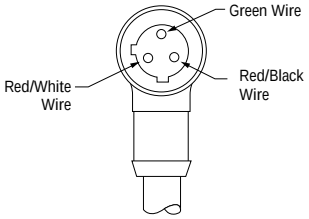
3-Pin Right-angle	**MQDC-306RA** **MQDC-315RA** **MQDC-330RA**	2 m (6.5 ft) 5 m (15 ft) 9 m (30 ft)	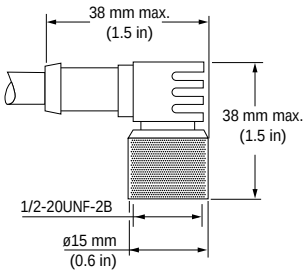	

WARRANTY: Banner Engineering Corporation warrants it products to be free from defects for one year. Banner Engineering Corporation will repair or replace, free of charge, any product of its manufacture found to be defective at the time it is returned to the factory during the warranty period. This warranty does not cover damage or liability for the improper application of Banner products. This warranty is in lieu of any other warranty either expressed or implied.

WARNING These photoelectric presence sensors do NOT include the self-checking redundant circuitry necessary to allow their use in personnel safety applications. A sensor failure or malfunction can result in either an energized or a de-energized sensor output condition.

Never use these products as sensing devices for personnel protection. Their use as a safety device may create an unsafe condition which could lead to serious injury or death.

Only MINI-SCREEN®, MULTI-SCREEN®, MICRO-SCREEN™, MACHINE-GUARD™ and PERIMETER-GUARD™ Systems, and other systems so designated, are designed to meet OSHA and ANSI machine safety standards for point-of-operation guarding devices. No other Banner sensors or controls are designed to meet these standards, and they must NOT be used as sensing devices for personnel protection.

MINI-BEAM® SM2A312D

Self-contained AC-operated Diffuse Mode Sensors

- Compact, modulated, self-contained diffuse proximity mode sensors for 24-240V ac operation
- 2-wire hookup for convenient installation
- Range to 380 mm (15 in) (referenced to 90% reflectance white test card)
- Switch-selectable for light operate or dark operate
- SPST SCR solid-state output switches up to 300mA; low leakage current and saturation voltage
- Rugged, epoxy-encapsulated construction: meets NEMA standards 1, 2, 3, 3S, 4, 4X, 12 and 13; IEC IP67
- Physically and electrically interchangeable with 18 mm barrel-type photoelectrics

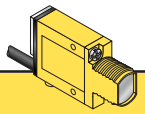

Infrared, 880 nm

MINI-BEAM Diffuse Mode

Models	Range	Cable	Supply Voltage	Output Type	Excess Gain	Beam Pattern
					Performance based on 90% reflectance white test card	
SM2A312D **SM2A312DQD**	380 mm (15 in)	2 m (6.5 ft) 3-Pin Micro QD	24-240V ac	SPST Solid-state 2-Wire	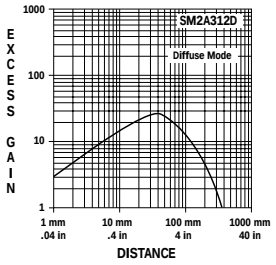	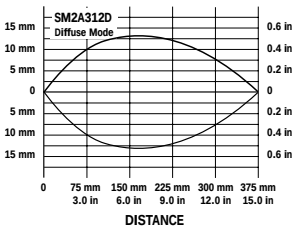

For Standard MINI-BEAMs:

i) 9 m (30 ft) cables are available by adding suffix **"W/30"** to the model number of any cabled sensor (e.g. - **SM2A312D W/30**).

ii) A 150 mm (6 in.) long pigtail cable with attached QD connector is available by adding suffix **"QDP"** to the model number of any MINI-BEAM sensor (e.g. - **SM2A312DQDP**). See page 5 for more information.

iii) A model with a QD connector requires an accessory mating cable. See page 8 for more information.

MINI-BEAM Installation and Alignment

Proper operation of the SM2A312D sensor requires that it be mounted securely and aligned properly. Excessive movement or vibration can result in intermittent or false operation caused by loss of alignment. For best results, final-mount the SM2A312D in an 18mm-hole by its threaded barrel or use a mounting bracket (see page 6).

1) Begin with the sensor at the desired distance from the object to be sensed, and at the approximate position where it will be mounted. The background should be as far behind the object as possible (at least three times the distance of the sensor from the object), and as dark a color as possible compared to the object. Ideally, the object should present its largest reflective surface to the sensor.

2) Switch the sensor to light-operate mode. With the object in the sensing position, apply power to the sensor, and advance the 15-turn GAIN control to maximum (clockwise end of rotation). The GAIN control is clutched at both ends to avoid damage, and will "free-wheel" when either endpoint is reached.

   If the sensor is "seeing" its reflected light, the alignment LED should be "on". Move the sensor up-down-right-left (include angular rotation) to find the center of movement zone within which the LED remains lit. Reducing the GAIN setting (if necessary) will reduce the size of the movement zone and make more precise alignment possible.

3) Repeat the alignment motions after each GAIN reduction. When you are satisfied that you have obtained optimum alignment, mount the sensor solidly in that position. Increase the GAIN to maximum. Test the system by removing the object from the sensing position. The receiver LED indicator should go "off". If the LED indicator does not go "off", the sensor is reacting to light reflected from a background surface. Reduce the GAIN setting until the alignment indicator goes "off", plus two additional full turns. Again place the object in the sensing position. If the alignment indicator does not come "on", the sensor is receiving as much or more light energy from the background as from the object. Consider the following alternatives:

   a) move the sensor closer to the object and reduce the sensitivity (GAIN);

   b) reduce background reflectivity by painting the background with flat-black paint, or by scuffing the background or cutting a hole through it;

   c) tilt the sensor or the background so that the sensing beam is not perpendicular to the background.

Diffuse Mode Alignment

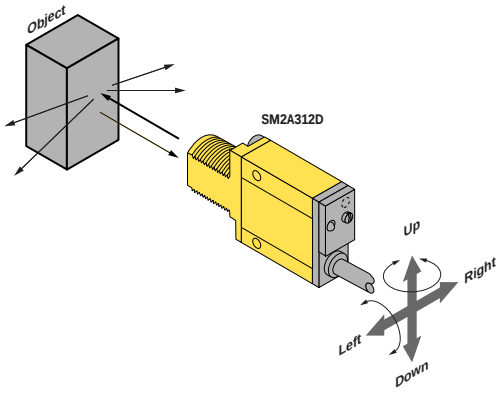

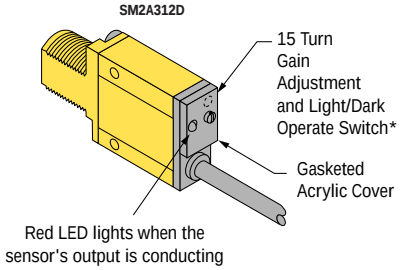

*** Note regarding Light/Dark operate switch:**
- Turn switch *fully* clockwise for light operate (sensor outputs conduct when object is present)
- Turn switch *fully* counterclockwise for dark operate (sensor outputs conduct when object is absent)

MINI-BEAM AC Product Specifications	
Supply Voltage and Current	24 to 240V ac (50/60 Hz), 250V ac max
Supply Protection Circuitry	Protected against transient voltages
Output Configuration	SPST SCR solid-state relay with either normally closed or normally open contact (light/dark operate selectable); 2-wire hookup
Output Rating	Minimum load current 5 mA; maximum steady-state load capability 300 mA to 50°C ambient (122°F) 100 mA to 70°C ambient (158°F) **Inrush capability** 3 amps for 1 second (non-repetitive); 10 amps for 1 cycle (non-repetitive) **Off-state leakage current** less than 1.7 mA rms **On-state voltage** drop ≤5 volts at 300 mA load, ≤10 volts at 15 mA load
Output Protection Circuitry	Protected against false pulse on power-up
Output Response Time	8 milliseconds on and off "OFF" response time specification does not include load response of up to ½ ac cycle (8.3 milliseconds). Response time specification of load should be considered when important. (NOTE: 300 millisecond delay on power-up.)
Repeatability	2.6 milliseconds; Response time and repeatability specifications are independent of signal strength.
Adjustments	LIGHT/DARK OPERATE select switch, and 15-turn slotted brass screw GAIN (sensitivity) adjustment potentiometer (clutched at both ends of travel). Both controls are located on rear panel of sensor and protected by a gasketed, clear acrylic cover.
Indicators	Red indicator LED on rear of sensor is "ON" when the load is energized
Construction	Reinforced VALOX® housing, totally encapsulated, o-ring sealing, acrylic lenses, and stainless steel screws
Environmental Rating	Meets NEMA standards 1, 2, 3, 3S, 4, 4X, 12, and 13; IEC IP67
Connections	PVC-jacketed 2-conductor 2 m (6.5ft) or 9 m (30ft) cables, or 3-pin micro-style quick disconnect (QD) fitting are available. QD cables are ordered separately. See page 8.
Operating Temperature	**Temperature:** -20° to +70°C (-4° to +158°F) **Maximum Relative Humidity:** 90% at 50°C (non-condensing)
Application Notes	i) ac MINI-BEAMs may be destroyed from overload conditions ii) Use on low voltage requires careful analysis of the load to determine if the leakage current or on-state voltage of the sensor will interfere with proper operation of the load iii) The false-pulse protection feature may cause momentary drop-out of the load when the sensor is wired in series or parallel with mechanical switch contacts
Certifications	CE CSA® UL®

VALOX® is a registered trademark of General Electric Company

MINI-BEAM AC Hookup Diagrams

AC Sensors with Attached Cable

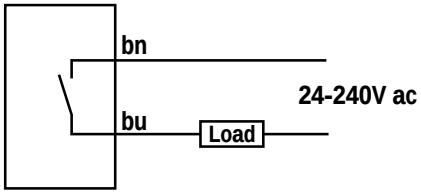

AC Sensors with Quick Disconnect (3-Pin Micro-Style)

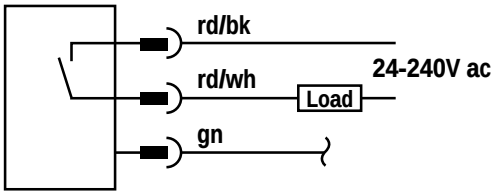

3-Pin Micro-Style Pin-out
(Cable Connector Shown)

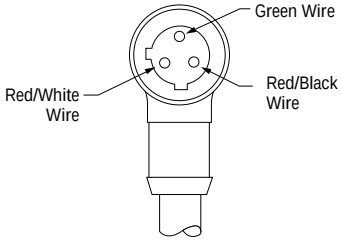

Quick Disconnect (QD) Option

AC MINI-BEAM sensors are sold with either a 2 m (6.5 ft) or a 9 m (30 ft) attached PVC-covered cable, or with a 3-pin micro-style QD cable fitting.

AC QD sensors are identified by the letters “QD” in their model number suffix. For more information on mating QD cables, see page 8.

MINI-BEAM Dimension Information

MINI-BEAM AC Sensor with Integral Cable

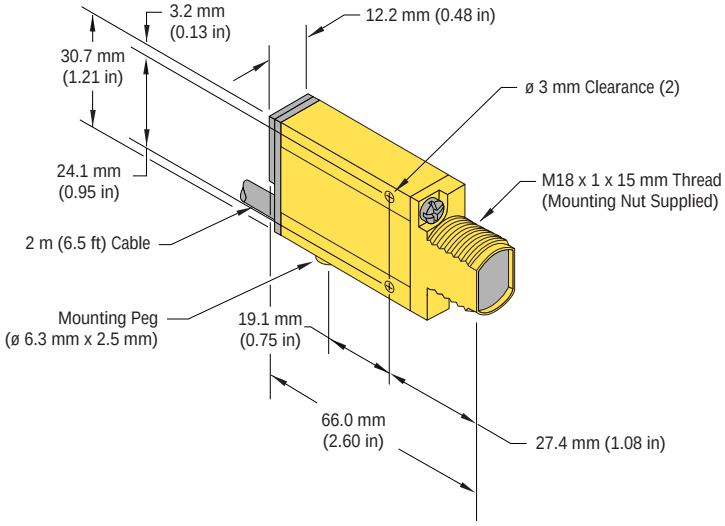

MINI-BEAM AC Sensor with Quick-Disconnect

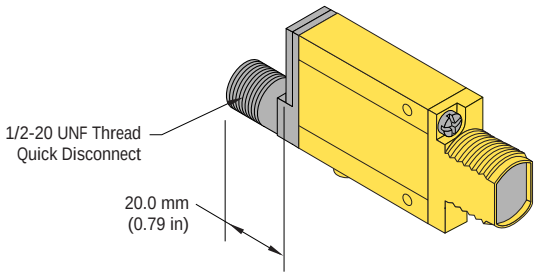

MINI-BEAM MODIFICATIONS

Model Suffix	Modification	Description		Example of Model Number
W/30	9 meter (30 ft) cable	All MINI-BEAM sensors may be ordered with an integral 9 m (30 ft) cable in place of the standard 2 m (6.5 ft) cable		SM2A312D W/30
QDP	Pigtail Quick Disconnect	All MINI-BEAMs may be built with a 150 mm (6 in) long integral cable which is terminated with the appropriate QD connector.		SM2A312DQDP

Replacement Lens Assemblies

MINI-BEAM lens assemblies are field-replaceable.

Model	Description	
UC-300L	Replacement lens for SM2A312D	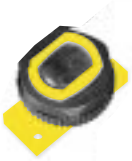

Right-Angle Reflectors

MINI-BEAM right-angle reflectors are useful for tight sensing locations. NOTE: These reflectors significantly decrease excess gain.

Model	Description	
RAR-300SM	• Side mount reflector • Profile dimension of 14 mm (0.56 in) in the direction of the scan	
RAR-300FM	• Front mount reflector that attaches directly to the threaded barrel of most MINI-BEAMs • Profile dimension of 34 mm (1.35 in) in the direction of the scan	

Mounting Brackets

Model	Description		
SMB312S	Stainless steel 2-axis, side mounting bracket	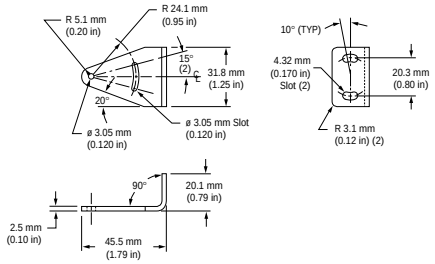	
SMB312PD	Stainless steel 18 mm barrel-mounting bracket	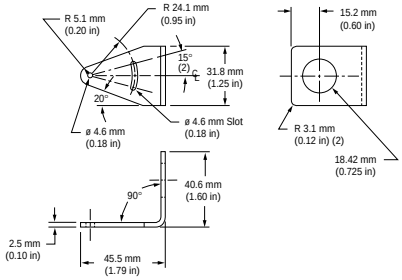	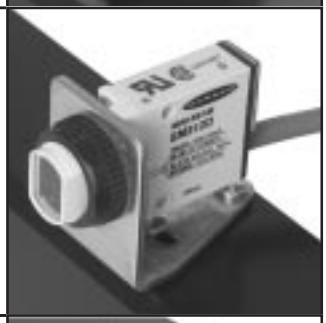
SMB312B	Stainless steel 2-axis, bottom mounting bracket	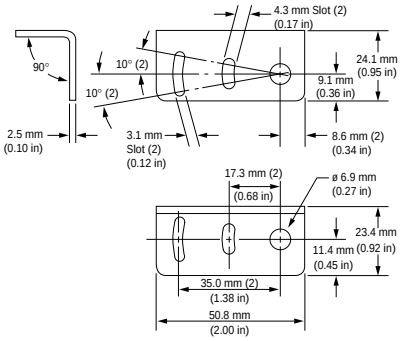	
SMB46L	• “L” bracket • 14 ga 316 stainless steel	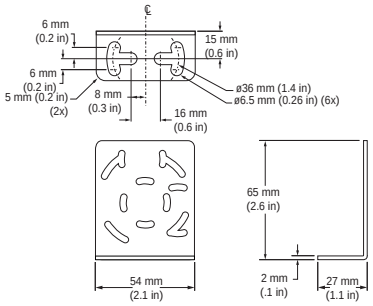	

Mounting Brackets

Model	Description	Dimensions	
SMB46S	• "S" bracket • 14 ga 316 stainless steel	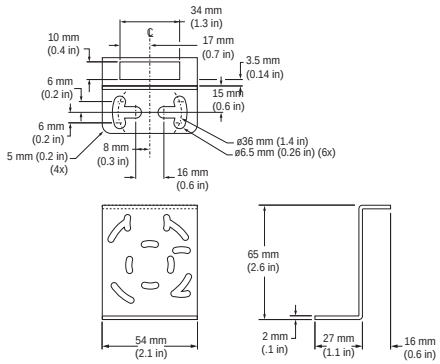	
SMB46U	• "U" bracket • 14 ga 316 stainless steel	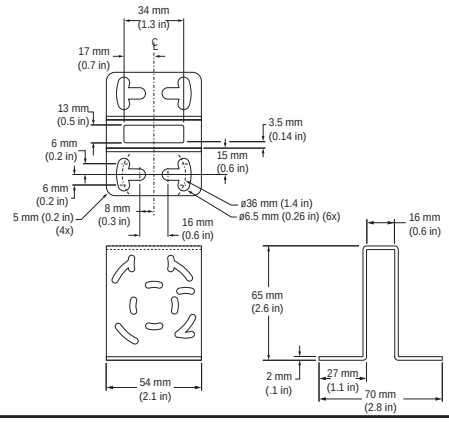	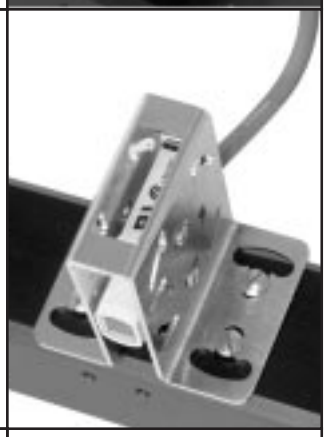
SMB18C	• 18 mm split clamp black VALOX® bracket • Stainless steel mounting hardware included	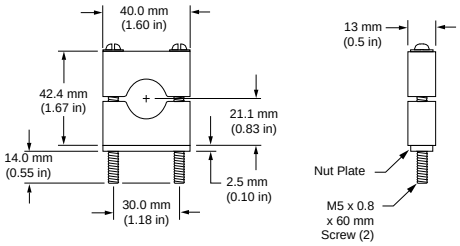	
SMB18S	• 18 mm swivel, black VALOX® bracket • Stainless steel mounting hardware included	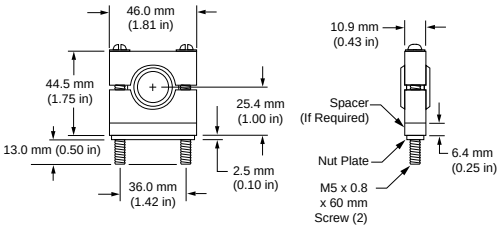	

Extension Cables (without connectors)

The following cables are available for extending the length of existing sensor cable. These are 30 m (100 ft) lengths of MINI-BEAM cable. This cable may be spliced to existing cable. Connectors, if used, must be customer-supplied.

Model	Type	Used with:
EC312A-100	2-conductor	All MINI-BEAM SM2A312 ac models

Micro-Style Quick Disconnect Cables

Cable: PVC jacket, polyurethane connector body, nickel-plated brass coupling nut
Conductors: 22 or 20 AWG high-flex stranded, PVC insulation, gold-plated contacts
Temperature: -40 to +80°C (-40 to +176°F)
Voltage Rating: 250V ac/300V dc (3-pin), 125V ac/150V dc (4-pin)

Style	Model	Length	Dimensions	Pin-out
3-Pin Straight	**MQDC-306** **MQDC-315** **MQDC-330**	2 m (6.5 ft) 5 m (15 ft) 9 m (30 ft)	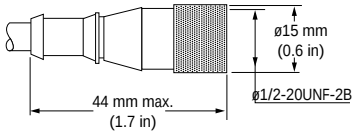	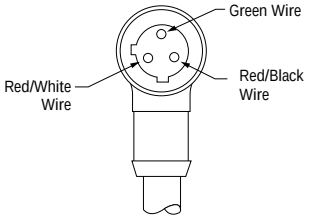
3-Pin Right-angle	**MQDC-306RA** **MQDC-315RA** **MQDC-330RA**	2 m (6.5 ft) 5 m (15 ft) 9 m (30 ft)	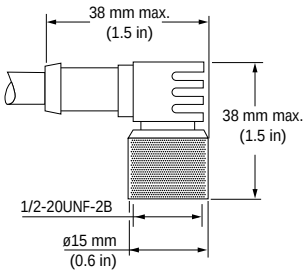	

WARRANTY: Banner Engineering Corporation warrants it products to be free from defects for one year. Banner Engineering Corporation will repair or replace, free of charge, any product of its manufacture found to be defective at the time it is returned to the factory during the warranty period. This warranty does not cover damage or liability for the improper application of Banner products. This warranty is in lieu of any other warranty either expressed or implied.

WARNING These photoelectric presence sensors do NOT include the self-checking redundant circuitry necessary to allow their use in personnel safety applications. A sensor failure or malfunction can result in either an energized or a de-energized sensor output condition.

Never use these products as sensing devices for personnel protection. Their use as a safety device may create an unsafe condition which could lead to serious injury or death.

Only MINI-SCREEN®, MULTI-SCREEN®, MICRO-SCREEN™, MACHINE-GUARD™ and PERIMETER-GUARD™ Systems, and other systems so designated, are designed to meet OSHA and ANSI machine safety standards for point-of-operation guarding devices. No other Banner sensors or controls are designed to meet these standards, and they must NOT be used as sensing devices for personnel protection.